ALL MATERIAL ARE RoHS AND CALIFORNIA PROP.65 COMPLIANT

Pb leadfree

CUSTOMER'S APPROVAL: _____ DATE: _____

FIRST ARTICLE SAMPLE REQUIRED: ☐ YES, ☐ NO.

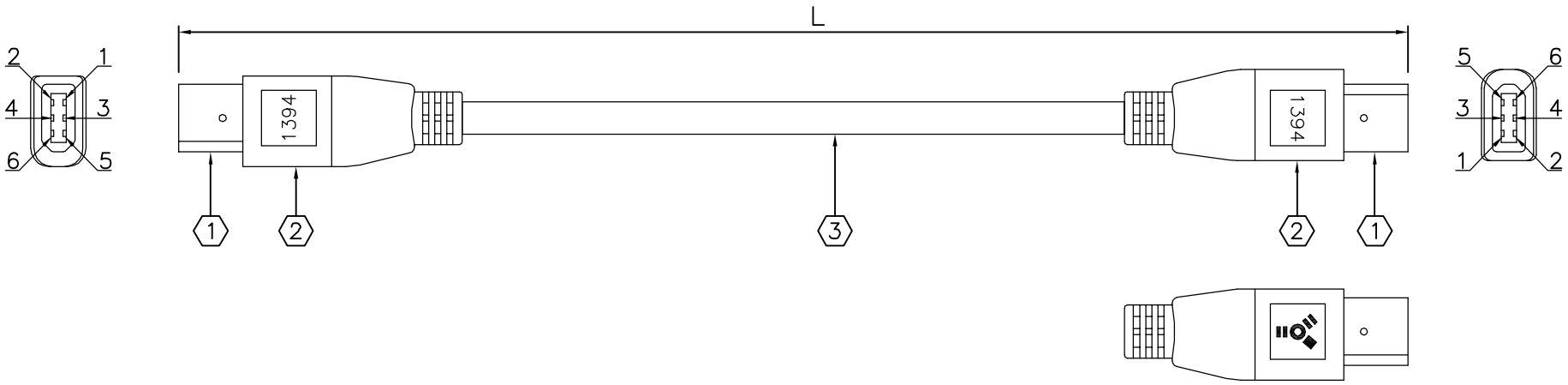

PINOUT CONFIGURATION

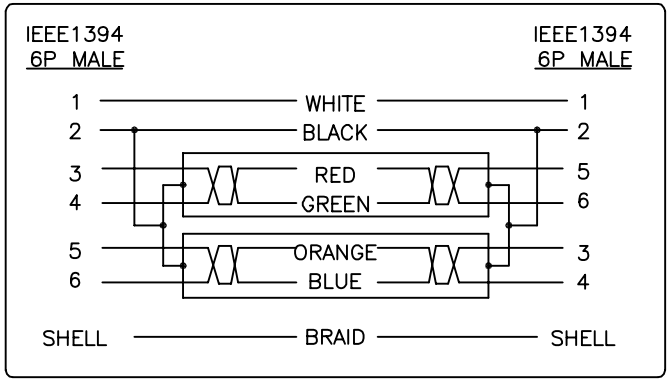

P/N	L
FW1020	1800±50
FW1030	3000±100
FW1050	4500±100

UNIT: mm

ITEM	DESCRIPTION	QTY.	UNIT
1	IEEE 1394 6P MALE CONNECTOR	2	PCS.
2	BLACK MOLDED PVC HOOD	2	PCS.
3	UL20276 (28AWGx1PAIR+AL/MYLAR+SHIELD)x2C+22AWGx2C	SEE	DWG.
	+MYLAR+AL/MYLAR+BRAID OVERALL; BLACK PVC JACKET		

REVISED DETAILS			REVISED BY
REV.	DESCRIPTION	DATE	

Part number: SEE TABLE	*Revision:* ORIG
Drawn by: Z.LIN	*Scale:* None
Checked by:	*Date:* 01/13/2016