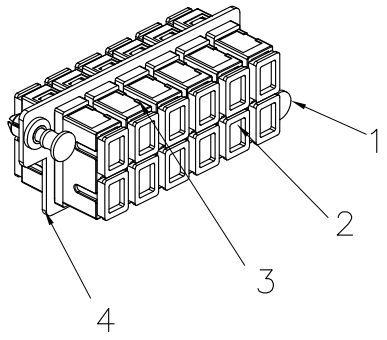

SCALE 1/2

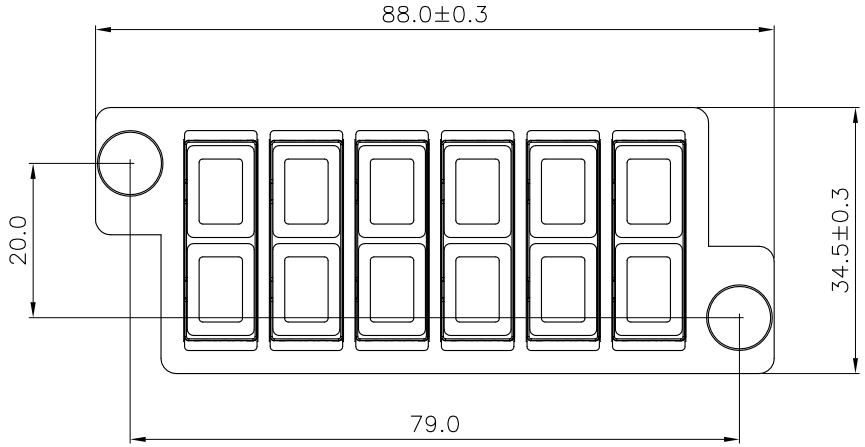

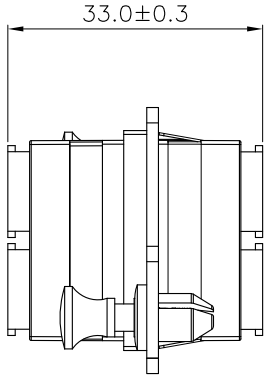

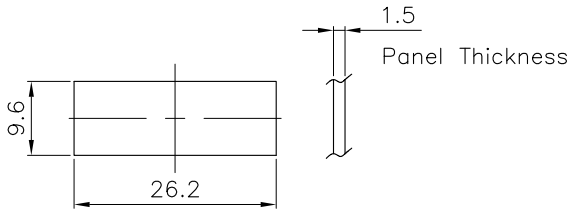

SUGGESTSD PANEL CUTOUT

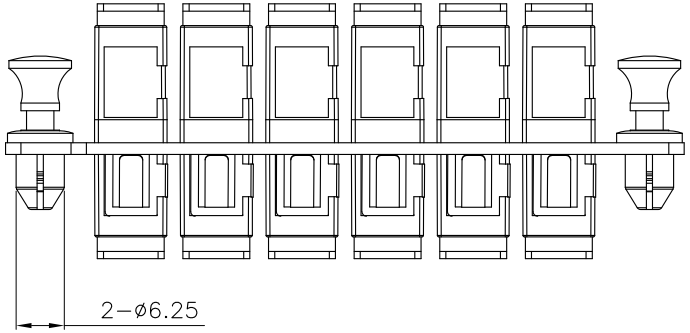

Specification :

1. Accessory : 2 pcs, nylon snap rivet.
2. Dust Cap : 24 pcs, PP.
3. Adaptor : 6 pcs, SC to SC, duplex, flangeless, w/ Zr. sleeve, Violet.
4. Panel material : SPCC, 1.5mm thickness.

GENERAL TOLERANCE OF DIMENSIONS X.XXX ±0.1 X.XX ±0.2 X.X ±0.3	DRAWING	28.NOV.2023	DANIEL	ACT
	CHECK	28.NOV.2023	DAY	
	APPROVAL	28.NOV.2023	FRANK	
		DATE	NAME	ITEM NO.: FA2158
	SCALE 1/1 (A4)	UNIT	mm	DES.: ADAPTERPLATE 12DSC OM4
HSF Spec.	DRAWING NO.	ADAPTERPLATE 12DSC OM4(SA1)		A1
RoHS	DRAWING CLASSIFICATION	S	SHEET 1 OF 1	